DISPLAY-1005

Champion Desk Flag 220x150mm

Please note:
This template is designed at 100% of the final size.
Rasterised artwork supplied at 100dpi to suit this template size, is the minimum requirement for a high quality final print.
Please ensure all fonts are converted to curves.

Artwork must be supplied in CMYK not RGB. Due to the limited colour gamut of various digital CMYK printing methods, not all Pantone colours can be achieved. We endeavour to match as close as possible but cannot always guarantee a 100% match. Colour variation will take place on different materials, namely PVC vs Fabric vs Vinyl. Florescent and metallic Pantone's cannot be matched. Only a tonal representation thereof can be achieved in our digital processes.

NB

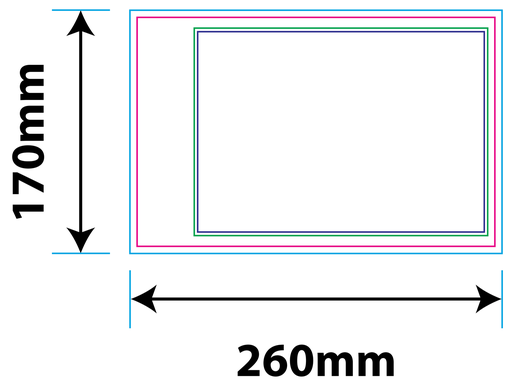

The blue line indicates the bleed area.

The pink line indicates where the image will be cut.

The green line indicates the safe area. Nothing of importance must pass this line.

The purple line indicates the text area. No text should pass this area.

NB

Please do not place any artwork on the grey lined area. Pantone colours should be supplied as a Pantone, solid coated spot within the print file or stipulated below with any special instructions. Please convert all text to curves. All artwork must be saved as a PDF.
with Adobe PDF Pre-set: PD/X-4 - Standard PDF/X-4. Please do not resize or change the template in any way.